AIDA

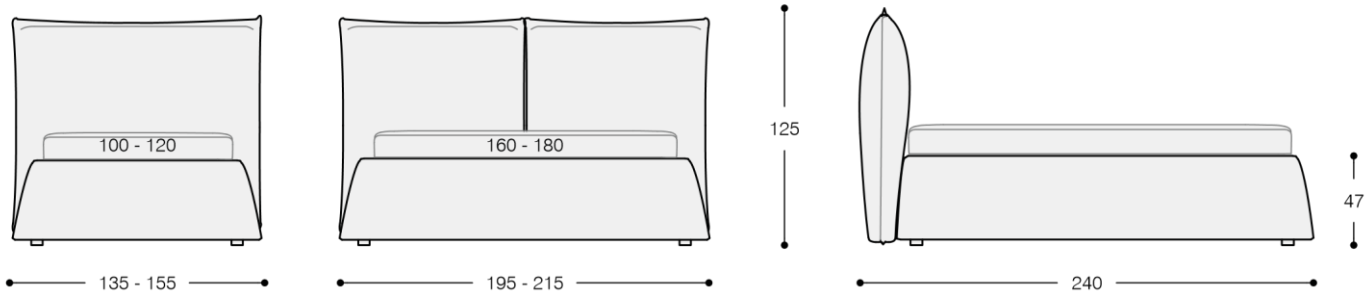

Bed for slat cm 100x200

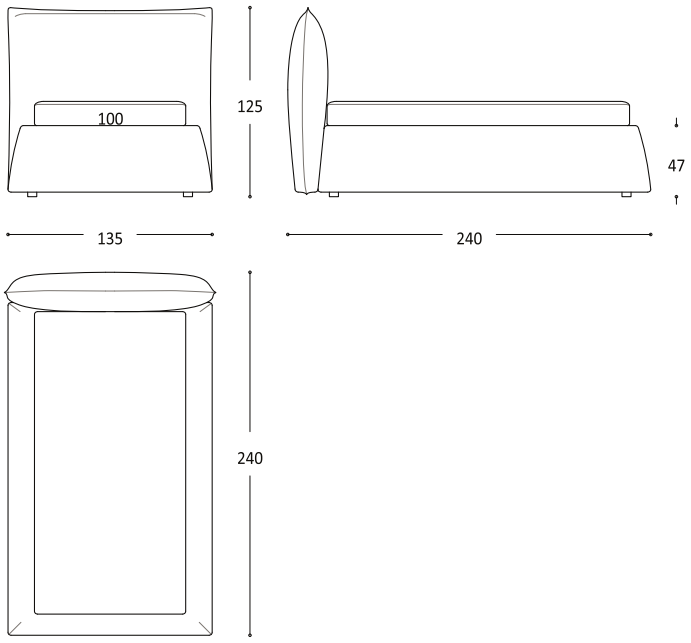

Bed for slat cm 120x200

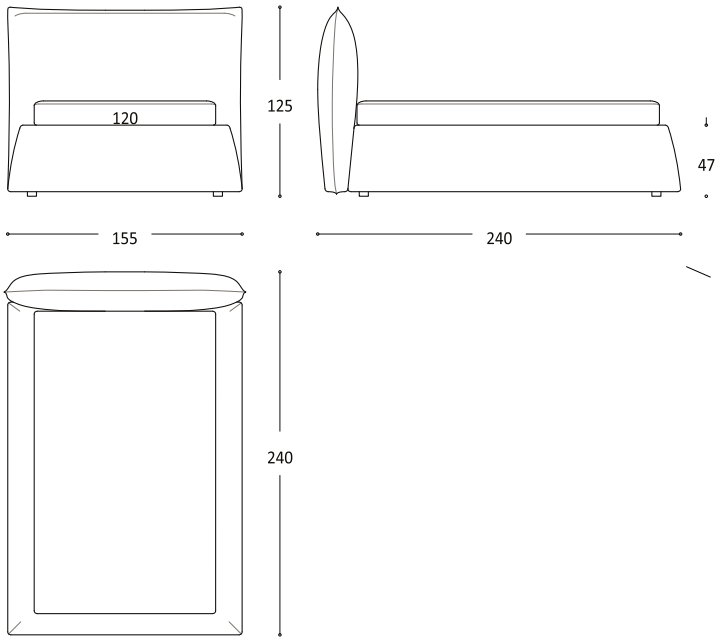

01

Bed for slat cm 160x200

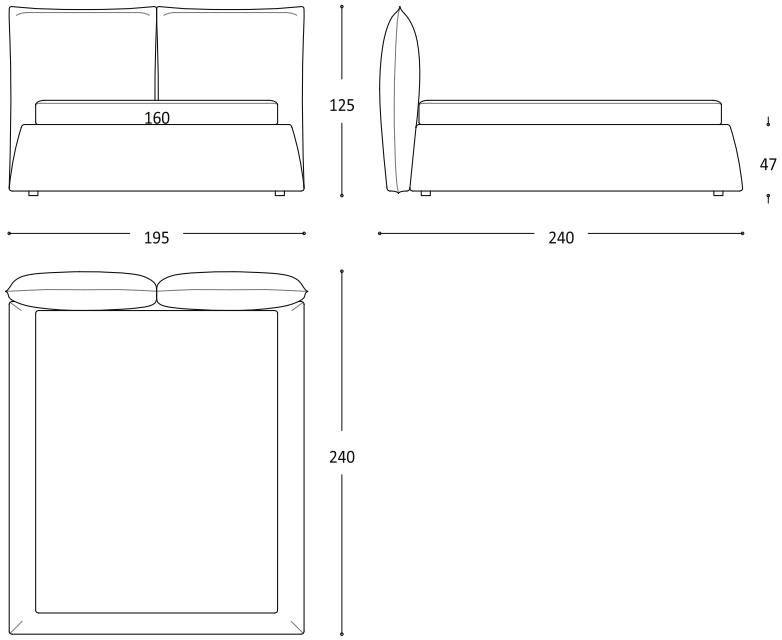
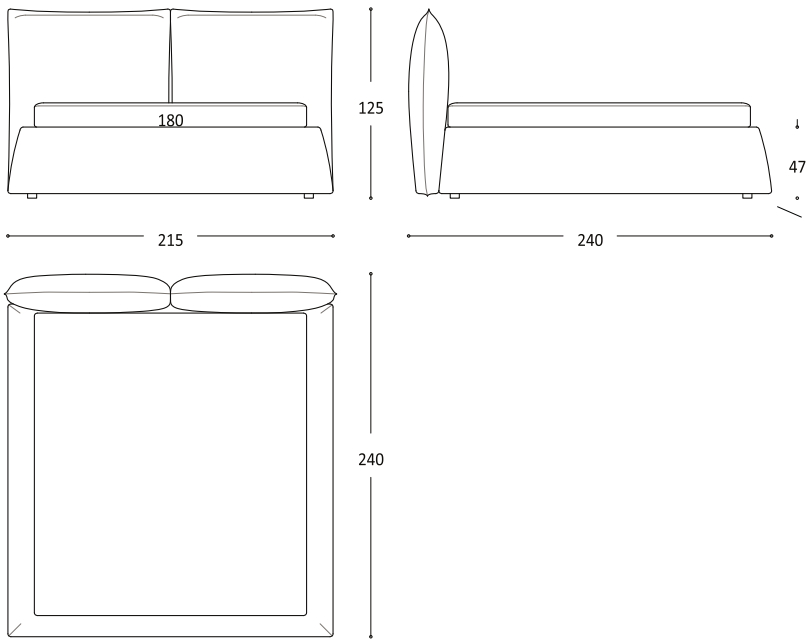
Bed for slat cm 180x200