Audo



EAVE SEAMLINE LOUNGE CHAIR
Designed by *Norm Architects*

DESCRIPTION Eave Seamline Lounge Chair features a sculpted upholstered form designed for comfort and support. Available with a fixed base or swivel with return base. Designed to complement the Eave and Eave Seamline Sofa collections.

SKU	71315-021736
EAN	5709262319428
EDITION	Without Swivel
FOAM TYPE	Global - HR
PRICE CATEGORY	PC0T
UPHOLSTERY	LOGAN
UPHOLSTERY COLOUR	YC04064-12
UPHOLSTERY TYPE	Fully Upholstered
DESIGNER	Norm Architects
DESIGN YEAR	2026
PRODUCT TYPE	Lounge Chair
ENVIRONMENT	Indoor
TEXTILE LEATHER CONSUMPTION	Textile Consumption: 3,4 m

COUNTRY OF ORIGIN	Lithuania
MATERIALS	Webbing / Belts, Plywood, Foam, Upholstery, Wadding, Chipboard
CO2e	For any inquiries, please contact your local Sales representative
WARRANTY	2 years (Download)
CARE INSTRUCTIONS	Upholstery

Audo

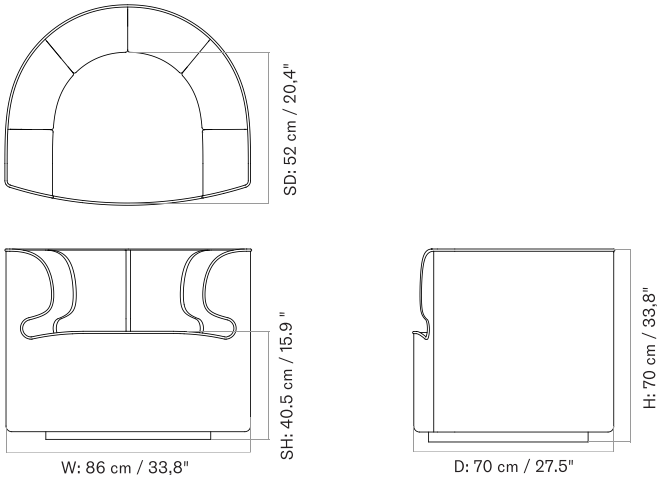

EAVE SEAMLINE LOUNGE CHAIR
Designed by *Norm Architects*

TECHNICAL SPECIFICATIONS

DIMENSIONS	Arm Height: 70 cm Seat Height: 40,5 cm Seat Depth: 52 cm Product Height: 70 cm Product Width: 86 cm Product Depth: 70 cm
NET WEIGHT	27,78 kg
GROSS WEIGHT	31,34 kg
PACKAGING TYPE	Brown Box
PACKAGING MEASUREMENTS	H x W x D 92 cm x 74,5 cm x 92 cm
PRODUCTION PROCESS	Constructed with a plywood, MDF, chipboard and softwood frame. Seat, backrest and armrests feature layered foam, polyester wadding and elastic belts. Available with or without return swivel.

Audo

EAVE SEAMLINE LOUNGE CHAIR
Designed by *Norm Architects*

SAMPLES

Explore available material samples to experience the product's finishes in your own space, easily ordered through our website or the B2B portal.

SAMPLES	VARIANT	SAMPLE SKU
	Upholsteries - LOGAN YC04064-12	71155-021327